Gloss

one of the prime quality

factors when assessing

products

ON-LINE GLOSS MEASURING TECHNOLOGY WITH SYSTEM

***ON-LINE*-Gloss Measurement**

contributes significantly
towards *raising the quality standard* and *lowering costs*
in the production
of high-quality surfaces

***ON-LINE*-**

Gloss Measuring System

the gloss characteristics
of products can be measured
and evaluated **–**
during the production process

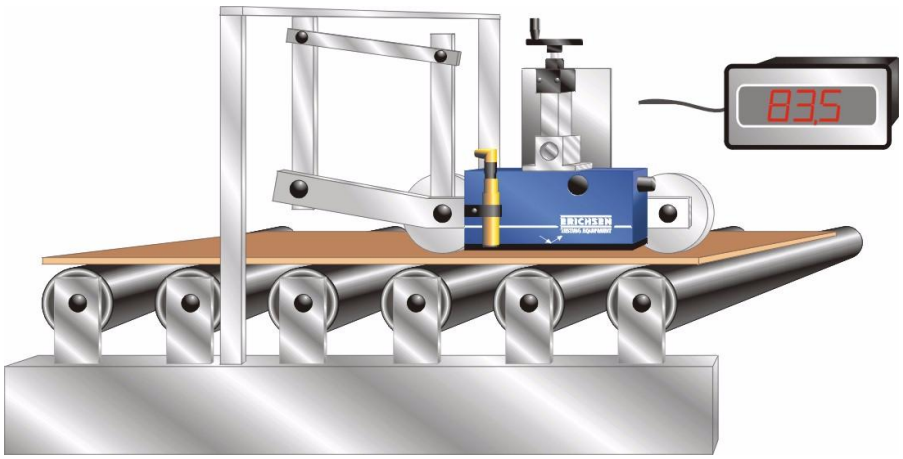

testing equipment for quality management

ERICHSEN
since 1910

Technical Description

ON-LINE

objective gloss control
in conformance with the
relevant standards

Introduction

More than ever before, the consistent quality of surfaces is of major importance in the manufacture and processing of surface-coated materials such as e.g. paper, plastics, metal or wooden surfaces. In almost all industrial sectors it is essential to guarantee a uniform, defined surface structure.

Processing errors, changes of supplier and material fluctuations can cause alterations to the gloss which frequently give rise to complaints or even to the material being rejected during quality control. Especially in recent times an accurate and objective method of assessing gloss has gained new significance as a result of increasing customer demands.

Gloss

In addition to the colour, the appearance of a lacquered surface is characterized to a great extent by its gloss. Gloss is a visual impression which is strongly influenced by the type of illumination used. Direct lighting intensifies the gloss effect, diffused illumination tends to reduce it. The height of the gloss is determined by the surface structure of the lacquer film itself. There are also numerous subjective factors which need to be taken into account when approaching the difficult task of measuring gloss.

The causes of gloss on a lacquer film: When a light beam falls upon a coating film at a defined angle of incidence, most of it will penetrate the coating. A portion of the light is reflected, some of it is scattered and the rest is absorbed.

Gloss types and their cause

Mirror gloss *approx. 70 - 100 gloss units*	*Ideally smooth surfaces present a mirror gloss which is assigned a gloss rating of approx. 70 to 100 gloss units.*
Medium gloss *approx. 30 - 70 gloss units*	*In this case most of the scattered light originates near the reflected light beam, i.e. a sort of "dispersion cone" forms with the direction of reflection as its axis.*
Matte *approx. 0 - 30 gloss units*	*Very diffuse scattering of the light beam with low reflection is equivalent to the absence of gloss, i.e. the lacquer appears to be "matte".*

Practical examples of ON-LINE gloss measurement

1. In a factory for laminated parquet

Equipment:

- **GLOSSMASTER 507-60°,** comprising: measuring head, measuring distance 10 mm, incl. sensor for scanning the test surface
- Mounting adapter
- Supply and display unit with 3 ½-digit LED display
- Reference input for min./max. gloss values and average value display
- Alarm lamp signals if the limit values are exceeded
- Time lag of 0 - 3 s to prevent minor deviations from actuating the signal

Application:

The measuring head of the GLOSSMASTER 507-60° ON-LINE is installed in the production line directly after the UV drying unit. The gloss measurement controls the quantity of coating applied. If the gloss value is exceeded an external alarm is activated. ON-LINE gloss measurement is the final step prior to packing and palletizing.

Advantages of the equipment:

- Without ON-LINE gloss measurement, individual samples must be taken from the production line and measured and evaluated using a laboratory gloss testing device.
- Savings due to avoidance of faulty batches and the resulting coating and material costs. Potential reworking costs are also avoided.

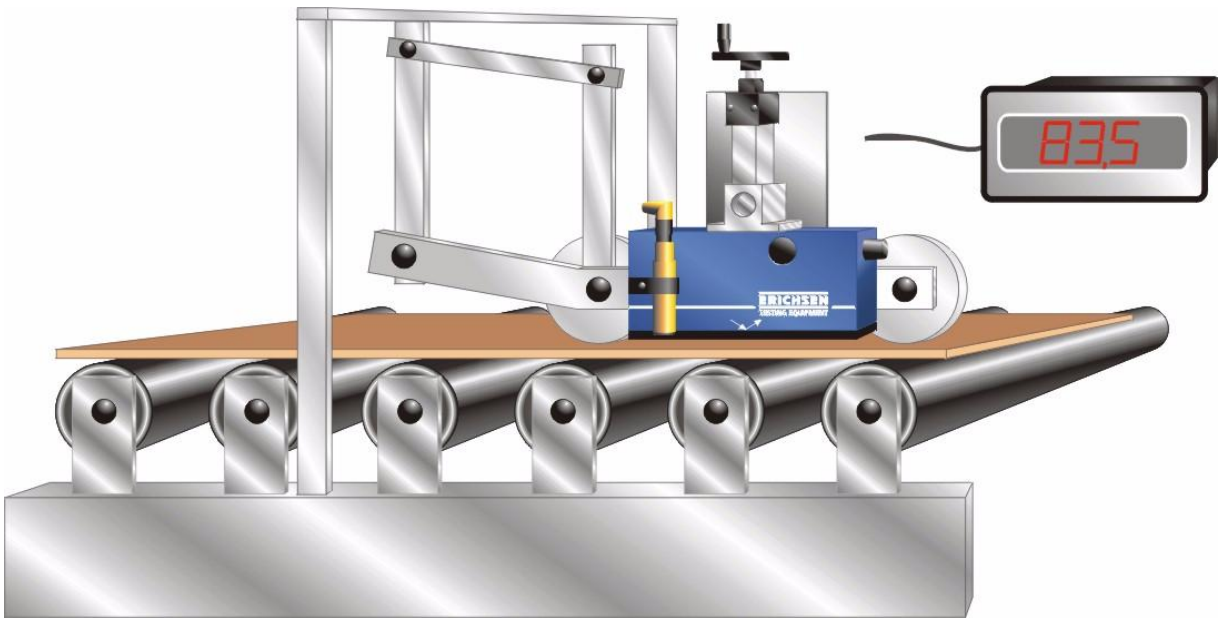

2. In a factory for plastic foils (PE film)

Equipment:

- **GLOSSMASTER 507-60°/A**, comprising: measuring head 60°/A with automatic calibration, measuring distance 10 mm
- Supply and display unit with 3 ½-digit LED display for carrying out automatic calibration
- Reference input for min./max. gloss values and average value display
- RS232C interface
- External LED display screen
- The external gloss value display was incorporated into the control box for the production line at customer's request
- Device for attachment to a traverse (provided by customer)

Application:

The measuring head of the GLOSSMASTER 507-60°/A ON-LINE is located in the processing line after an extruding unit for manufacturing plastic films. The surface characteristics of the foils are automatically determined by the ON-LINE gloss measuring device. The foil is subsequently rolled to a coil and packed.

Advantages of the equipment:

- Without ON-LINE gloss measurement a specimen would have to be cut out of the processed strip and subsequently measured and evaluated using a laboratory gloss testing device.
- Saves time and material expenditure and also large quantities of waste materials.

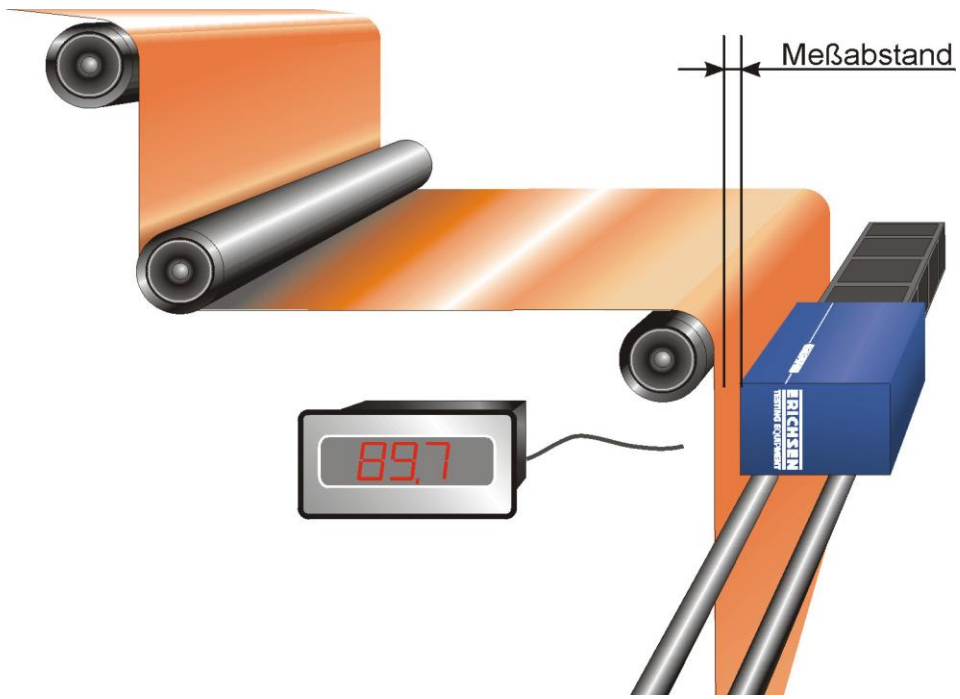

(Messabstand: Measuring distance)

3. In a galvanizing shop

Equipment:

- **GLOSSMASTER 507-60°**, comprising: 60° measuring head, measuring distance 10 mm incl. sensor for scanning the test surface
- Supply and display unit with 3 ½-digit LED display
- Distance piece for maintaining the measuring distance
- Analogue output

Application:

The galvanizing plant produces sheet zinc which is used, e.g., as material for gutters. During the manufacturing sequence the material runs through a pickling plant. The GLOSSMASTER measurement provides information about the outcome of the pickling process, making it possible to determine and adjust the pickling time accordingly. An ON-LINE colour measurement is also conducted during the same manufacturing sequence. Based on the components of the colour measurement the composition and concentration of the pickling bath can be monitored and regulated.

Advantages of the equipment:

- The pickling process is regulated on the basis of the gloss and standard colour values.
- Without ON-LINE gloss measurements controls must be conducted by way of extensive and costly single measurements.
- Saves large quantities of material and/or high reworking costs resulting from faulty batches.
- Avoidance of scrap as a result of timely identification of errors.

Special features of ON-LINE gloss measurements

- Non-contact, continuous gloss measurements during production, coating or refining operations for in-process or quality controls
- Automatic calibration as an optional feature
- Alarm signal when the prescribed min./max. tolerances are exceeded
- Choice of possible gloss measurement geometries: 20° or 60°

Standard Configuration and Accessories

- **GLOSSMASTER 507-60° ON-LINE** with supply and display unit incl. 3 ½-digit LED display
- **GLOSSMASTER 507-60°/A ON-LINE (automatic calibration)** with supply and display unit incl. 3 ½-digit LED display
- **Optional accessories**, e.g. for *mounting the measuring head*, *processing data* or further *automation components* are included in the table on the next page.
- Combination of choice of components to meet customizing requirements possible. See table on the following page.

Features, Technical Data and Order Information

Models	**GLOSSMASTER 507-60° ON-LINE** Standard Version	**GLOSSMASTER 507-60°/A ON-LINE** Standard Version autom. calibration	**GLOSSMASTER ON-LINE** Customized Version (optional)
Order No.	01990131	02040131	
Gloss Measuring Heads			
Measuring head with 20° geometry 160×55×110 mm (L×W×H)			05460132
Measuring head with 60° geometry 205×55×85 mm (L×W×H)	×		05480132
Supply and Display Units			
3 ½-digit LED Display 235×280×115 mm (L×W×H)	×		05510132
for connecting several measuring heads			on request
Gloss Measuring Heads			
Measuring head 20°/A 420×170×110 mm (L×W×H)			05520132
Measuring head 60°/A 420×170×110 mm (L×W×H)		×	05540132
Supply and Display Units ***(for version with automatic calibration)***			
3 ½-digit LED-Display 235×280×115 mm (L×W×H)		×	05550132
for connecting several measuring heads			on request

Accessories ***(the following choice of accessories is available for the above versions)***	
Mounting for measuring head:	
Mounting adapter, 100 mm travel	070013841
Data Processing	
Analogue output 4 - 20 mA	05290132
Analogue output 10 V	05300132
RS 232C Interface	05310132
BCD parallel output (pos. logic)	05320132
Automation Components	
Automatic identification of distance between 2 specimens:	
- by optical sensor	05330132
- by capacitive sensor	05340132
External LED display screen	05350132
Min/Max specification and average	05360132
Guide rolls for spacing	05370132

(The fields marked with ✕ refer to ON-LINE standard versions)

ERICHSEN GLOSSMASTER *ON-LINE*

List of References

Germany	***Application***
Bausch AG, Buttenwiesen	***Furniture foils***
BP Chemicals Plastec, Nordhorn	***Plastic foils***
BP Chemicals, Wasserburg	***Plastic foils***
Coesfelder Holzwerke GmbH & Co. KG, Coesfeld	***Laminated parquet***
Holzwerk O. Trehürne, Südlohn	***Laminated parquet***
HT-Troplast AG, Troisdorf (ehem. Dynamit Nobel)	***Plastic foils***
Kurz Leonard GmbH Co. KG, Fürth	***Plastic surface finishes***
Letron, Aschaffenburg	***Furniture foils***
Meister-Leisten Schulte GmbH, Rüthen	***Laminated parquet***
Perstorp Unidor, Bürstadt	***Furniture foils***
Rheinzink GmbH, Datteln	***Metal surface finishes***
VAW, Grevenbroich	***Metal surface finishes***
Windmöller & Hölscher, Lengerich	***Plastic foils***
WKP Württembergische Kunststoffplatten GmbH, Unterensingen	***Plastic surface finishes***

Brazil

Degussa Brasil LtdR. Cep.

England

Camvac, Thetford, Nordfolk
DRG Paper & Board, Keynsham Mills, Keynsham, Bristol
(SAPPI European Paper Mills)
Pilkington Glass, Doncaster, South Yorkshire

France

Papeteries de Guyenne, Thiviers
UGINE S.A., Gueugnon

Israel

ETZ Lavud Ltd., Petach-Tikva

The Netherlands

LAMETT INDUSTRIES, Almelo

Norway

Norske Skog Flooring, Lyngdal (ehem. Fibo Trespo)